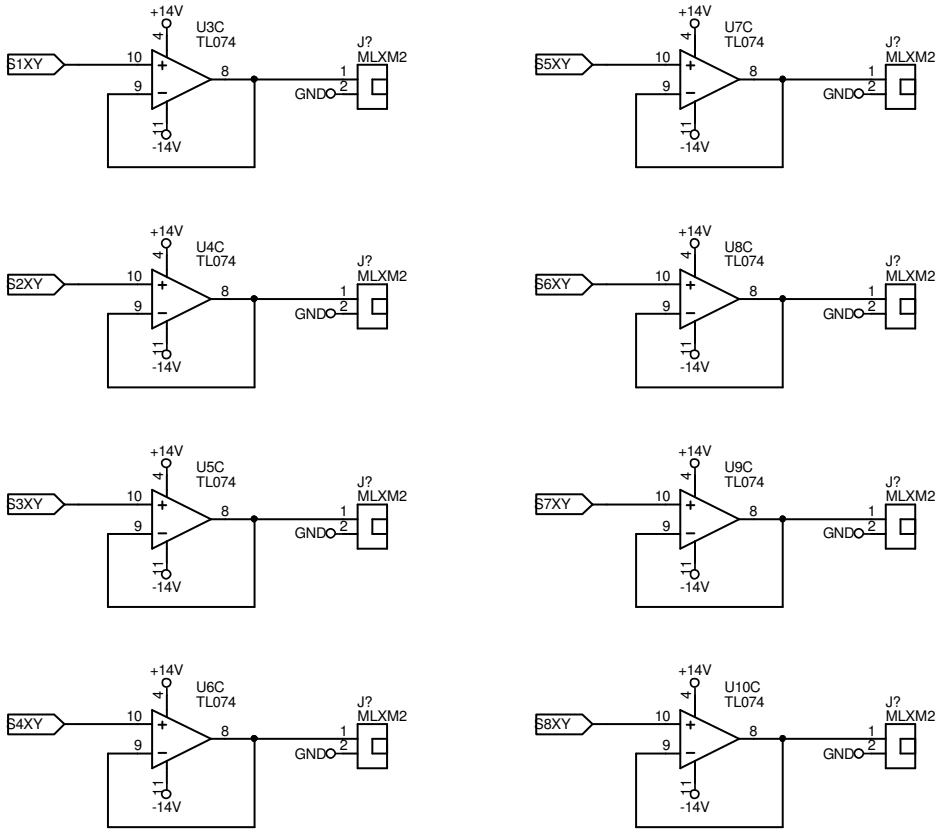

DESIGNamb01	NAME: B FORMAT DECODER 1	
FILE: AMB01-03.SCH	TITLE: GAIN RETURN - OUTPUTS	
CREATED: 29/04/99	MOD: 10/01/2004	
SHEET: 3 OF 3	REV: 1.0	SIZE: A3

ICARUS 07748 766447