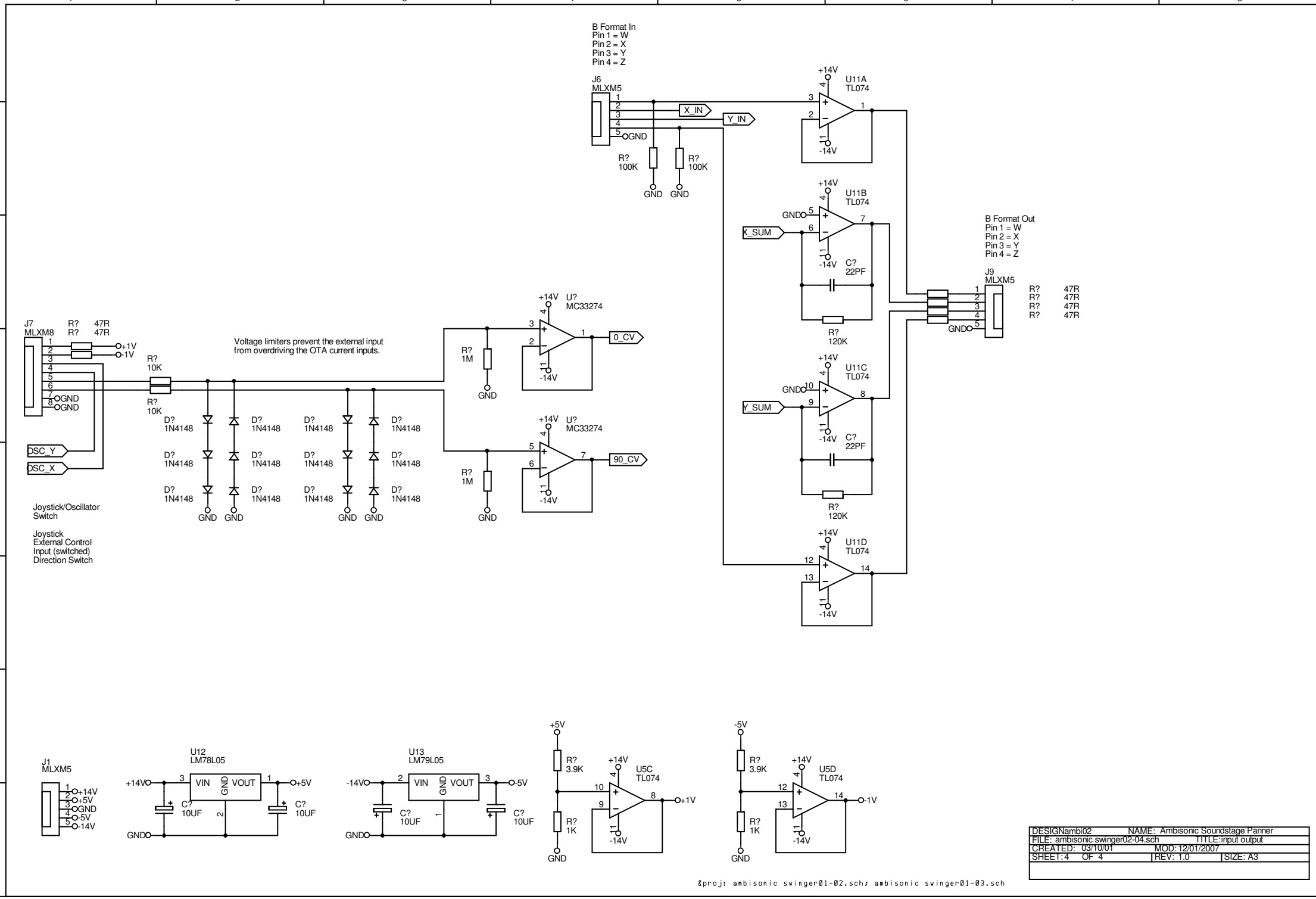
B Format In
Pin 1 = W
Pin 2 = X
Pin 3 = Y
Pin 4 = Z
J6
MLXM5
X_IN
Y_IN
GND
R?
100K
R?
100K
U11A
TL074
U11B
TL074
U11C
TL074
U11D
TL074
+14V
-14V
X_SUM
Y_SUM
C?
22PF
R?
120K
B Format Out
Pin 1 = W
Pin 2 = X
Pin 3 = Y
Pin 4 = Z
J9
MLXM5
R? 47R
R? 47R
R? 47R
R? 47R
J7
MLXM8
R? 47R
R? 47R
+1V
-1V
R?
10K
R?
10K
Voltage limiters prevent the external input
from overdriving the OTA current inputs.
D?
1N4148
R?
1M
U?
MC33274
0_CV
90_CV
OSC_Y
OSC_X
Joystick/Oscillator
Switch
Joystick
External Control
Input (switched)
Direction Switch
J1
MLXM5
+14V
+5V
GND
-5V
-14V
U12
LM78L05
VIN
GND
VOUT
C?
10UF
U13
LM79L05
+5V
-5V
R?
3.9K
R?
1K
U5C
TL074
U5D
TL074
+1V
-1V
DESIGNambi02
NAME: Ambisonic Soundstage Panner
FILE: ambisonic swinger02-04.sch
TITLE:input output
CREATED: 03/10/01
MOD: 12/01/2007
SHEET: 4 OF 4
REV: 1.0
SIZE: A3
&proj: ambisonic swinger01-02.sch; ambisonic swinger01-03.sch