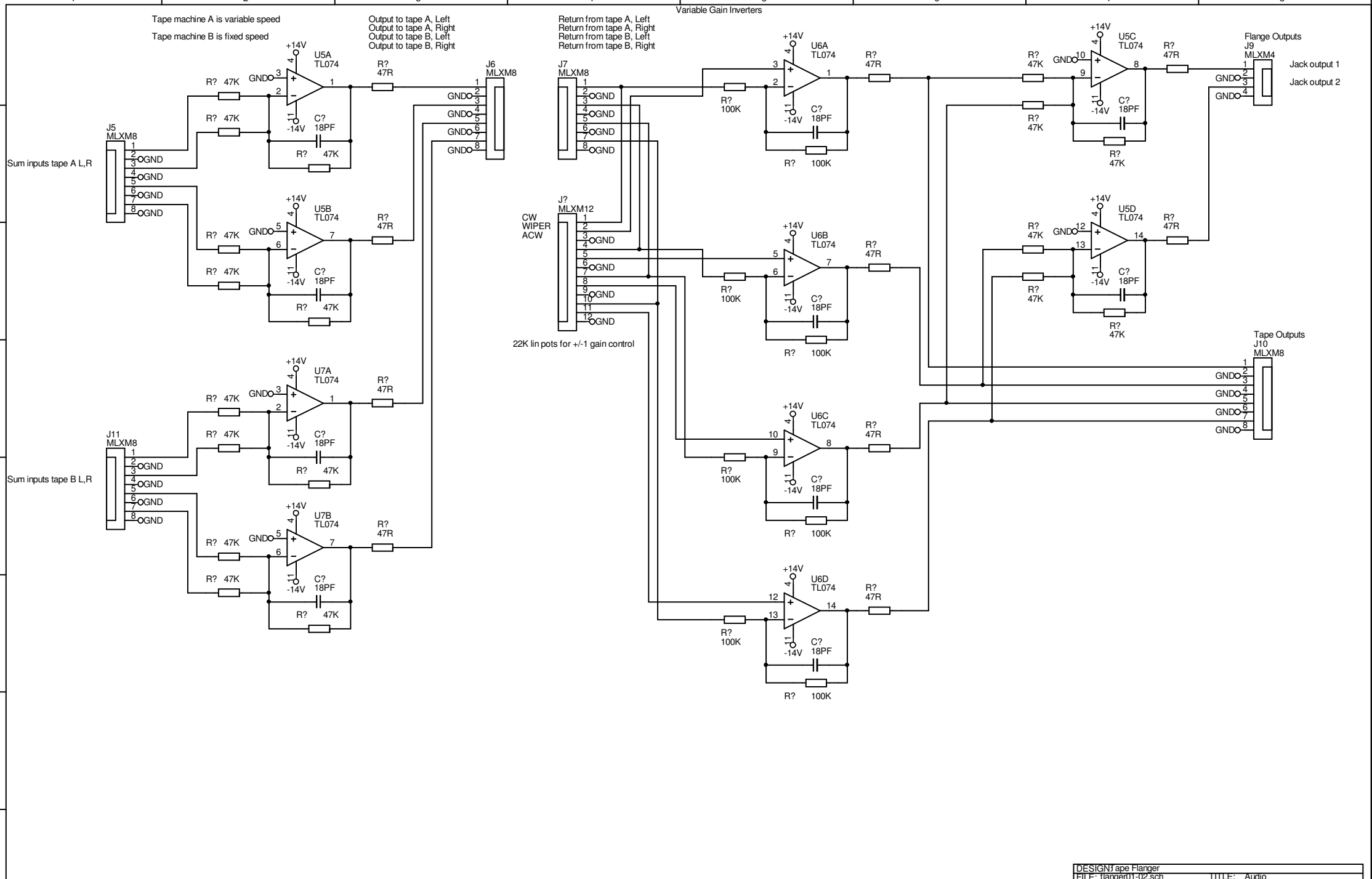
Variable Gain Inverters
Tape machine A is variable speed
Tape machine B is fixed speed
Output to tape A, Left
Output to tape A, Right
Output to tape B, Left
Output to tape B, Right
Return from tape A, Left
Return from tape A, Right
Return from tape B, Left
Return from tape B, Right
Sum inputs tape A L,R
Sum inputs tape B L,R
CW
WIPER
ACW
22K lin pots for +/-1 gain control
Flange Outputs
J9
MLXM4
Jack output 1
Jack output 2
Tape Outputs
J10
MLXM8
J5
MLXM8
J11
MLXM8
J6
MLXM8
J7
MLXM8
J?
MLXM12
U5A
U5B
U5C
U5D
U6A
U6B
U6C
U6D
U7A
U7B
TL074
+14V
-14V
GND
R? 47K
R? 47R
R? 100K
C? 18PF
DESIGN: Tape Flanger
FILE: flanger01-02.sch
TITLE: Audio
CREATED: 04/01/06
MOD: 18/04/2006
SHEET: 2 OF 3
REV: 1.0
SIZE: A3