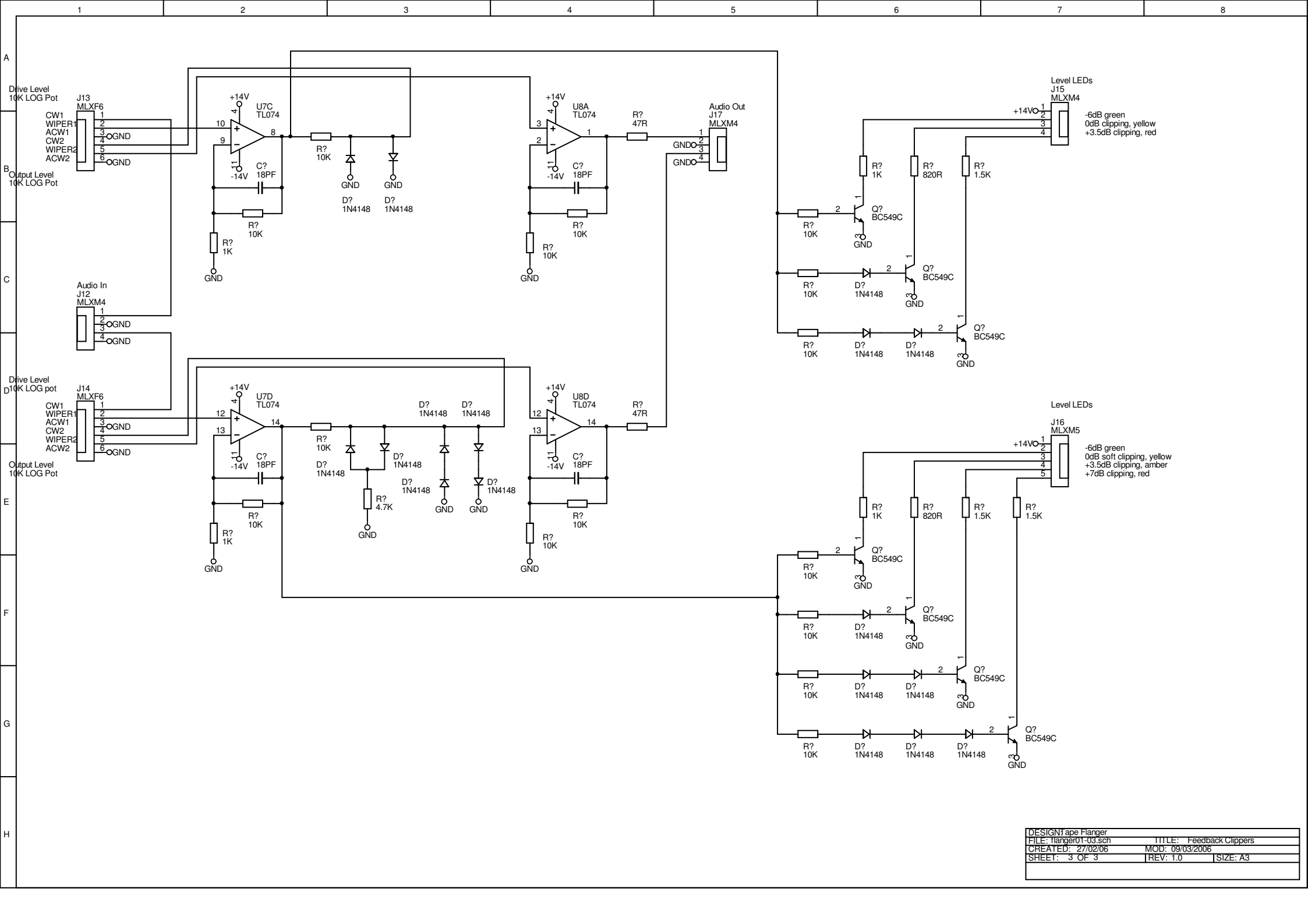

DESIGN: Tape Flanger		
FILE: flanger01-03.sch	TITLE: Feedback Clippers	
CREATED: 27/02/06	MOD: 09/03/2006	
SHEET: 3 OF 3	REV: 1.0	SIZE: A3