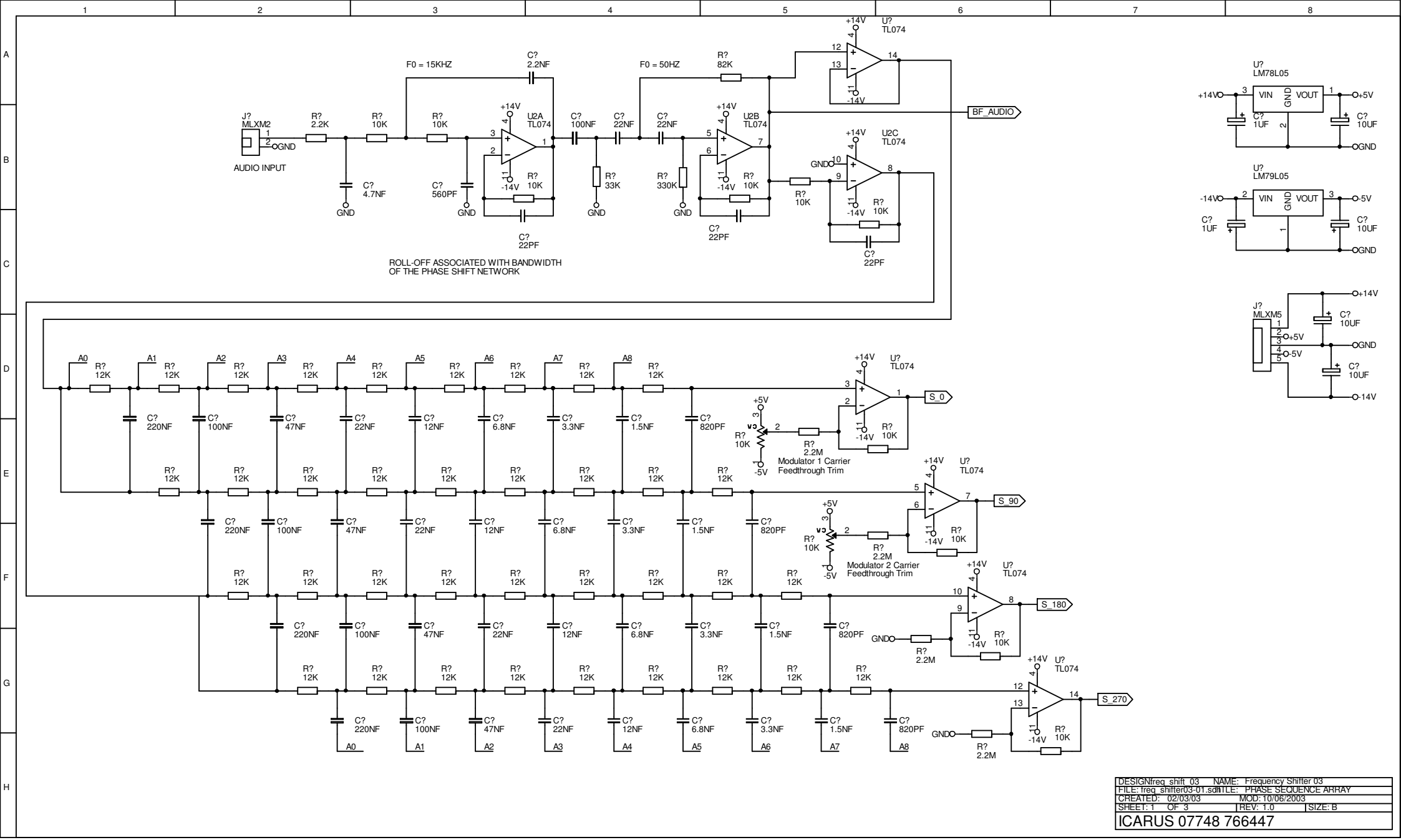

DESIGNfreq_shift_03	NAME: Frequency Shifter 03		
FILE: freq_shifter03-01.sdh	TITLE: PHASE SEQUENCE ARRAY		
CREATED: 02/03/03	MOD: 10/06/2003		
SHEET: 1 OF 3	REV: 1.0	SIZE: B	

ICARUS 07748 766447