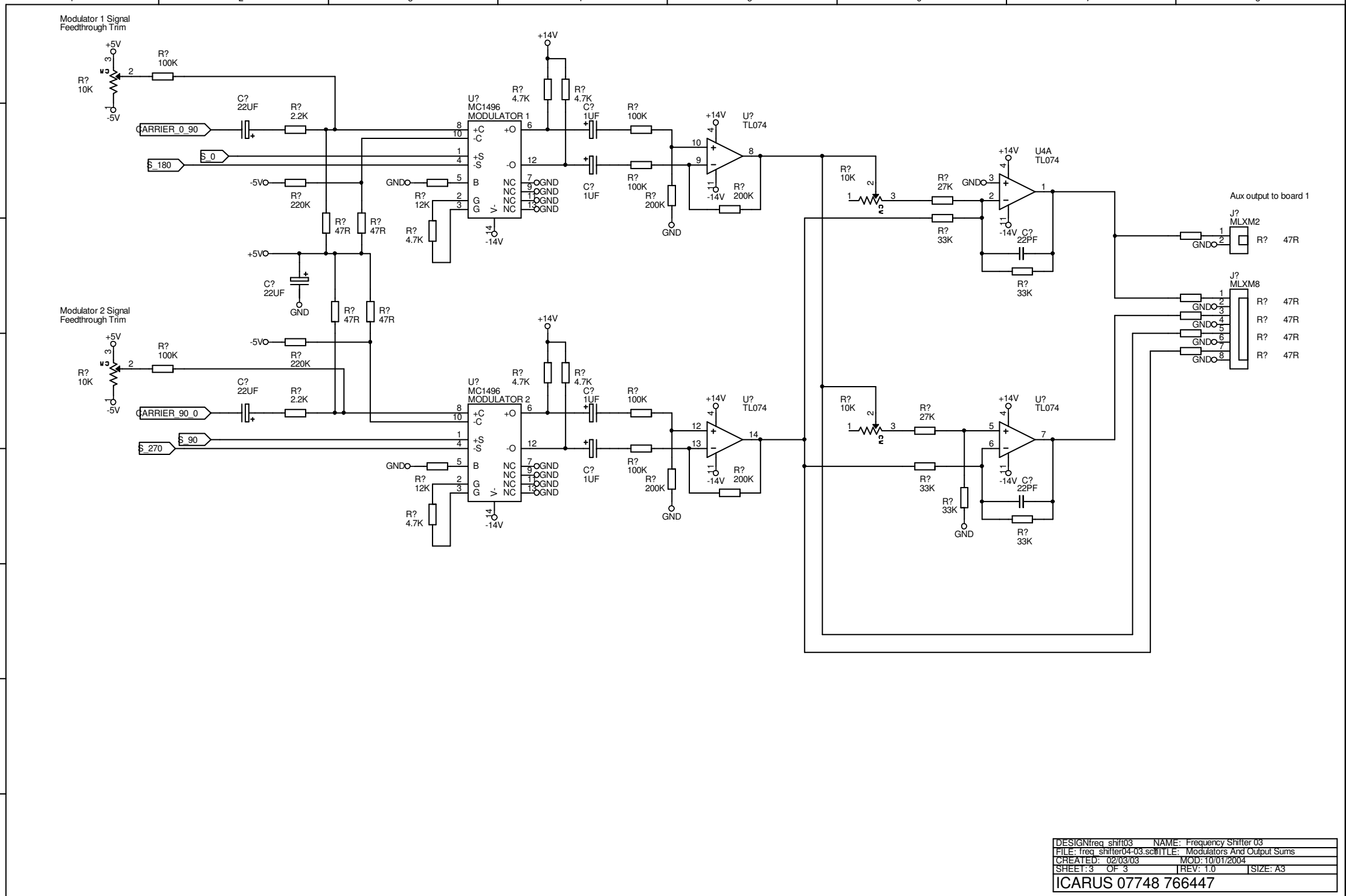

DESIGNfreq_shift03	NAME: Frequency Shifter 03	
FILE: freq_shifter04-03.sch	TITLE: Modulators And Output Sums	
CREATED: 02/03/03	MOD: 10/01/2004	
SHEET: 3 OF 3	REV: 1.0	SIZE: A3

ICARUS 07748 766447