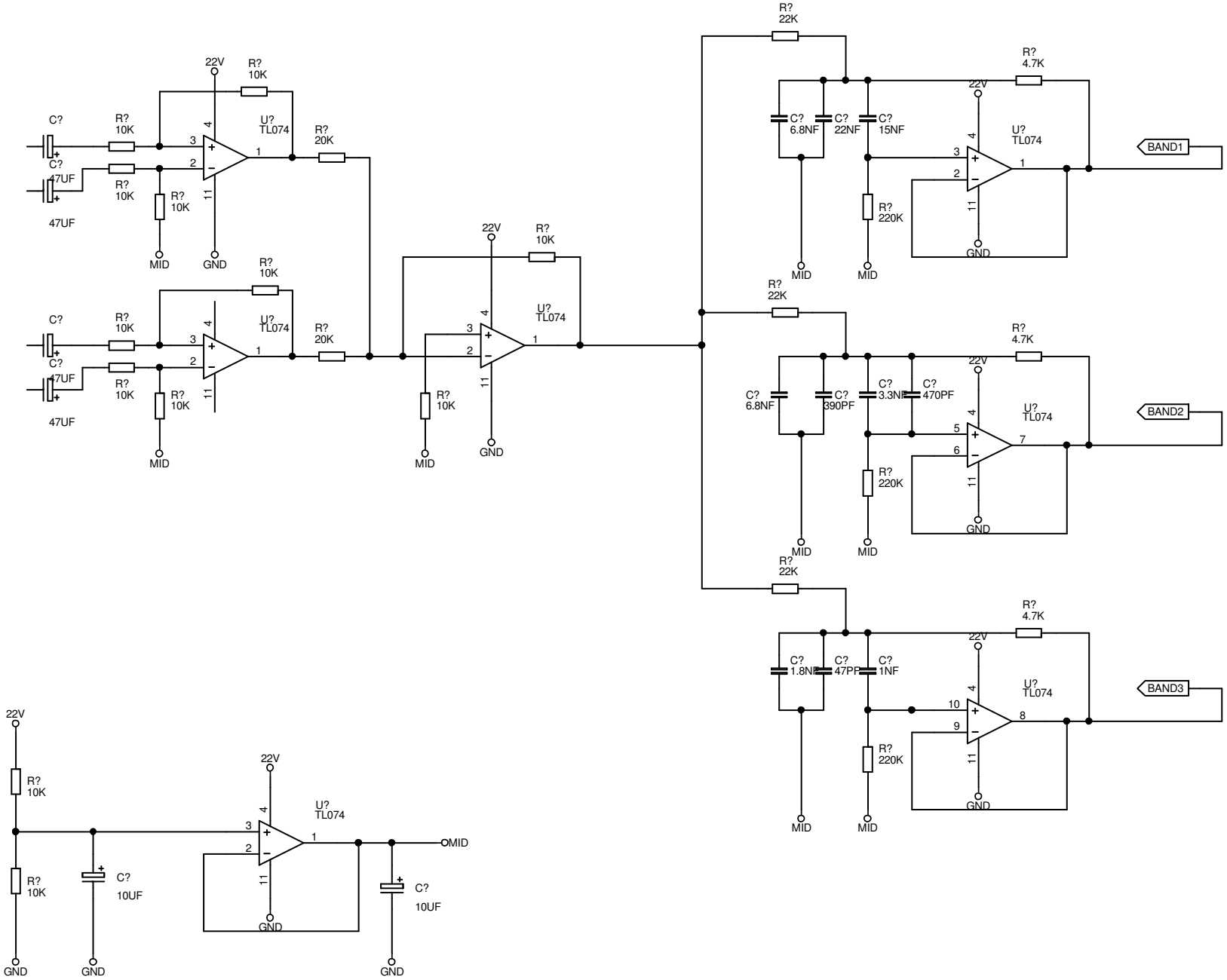

DESIGNMOD01	NAME: RADIO GLEN MODULATOR	
FILE: MOD01-03.SCH	TITLE: AUDIO INPUT AND BANDSPLITTING	
CREATED: 08/12/97	MOD: 22/01/2004	
SHEET: 3 OF 6	REV: 1.0	SIZE: A3

ICARUS 07748 766447