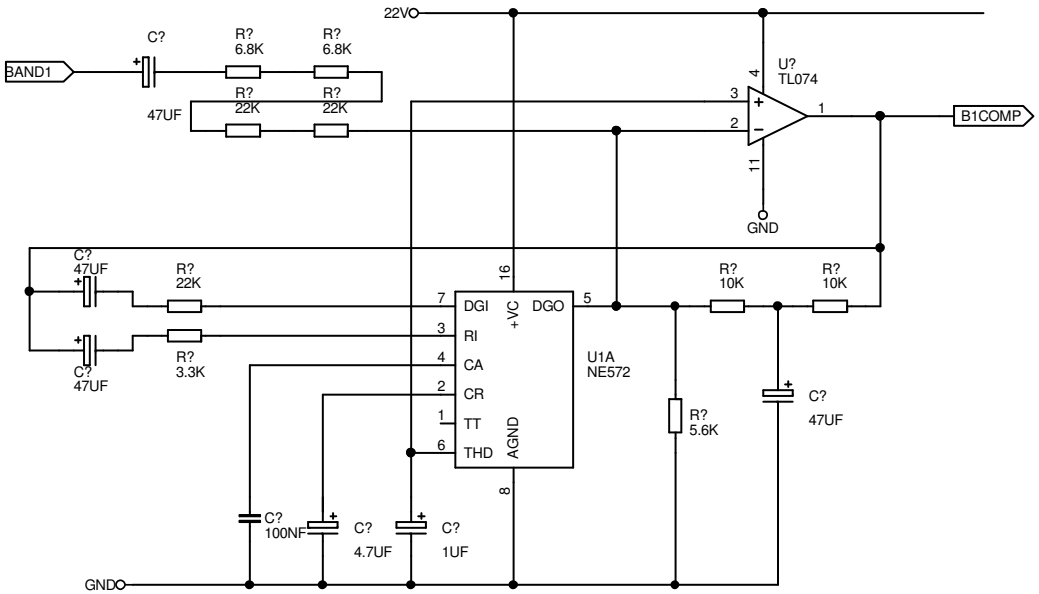


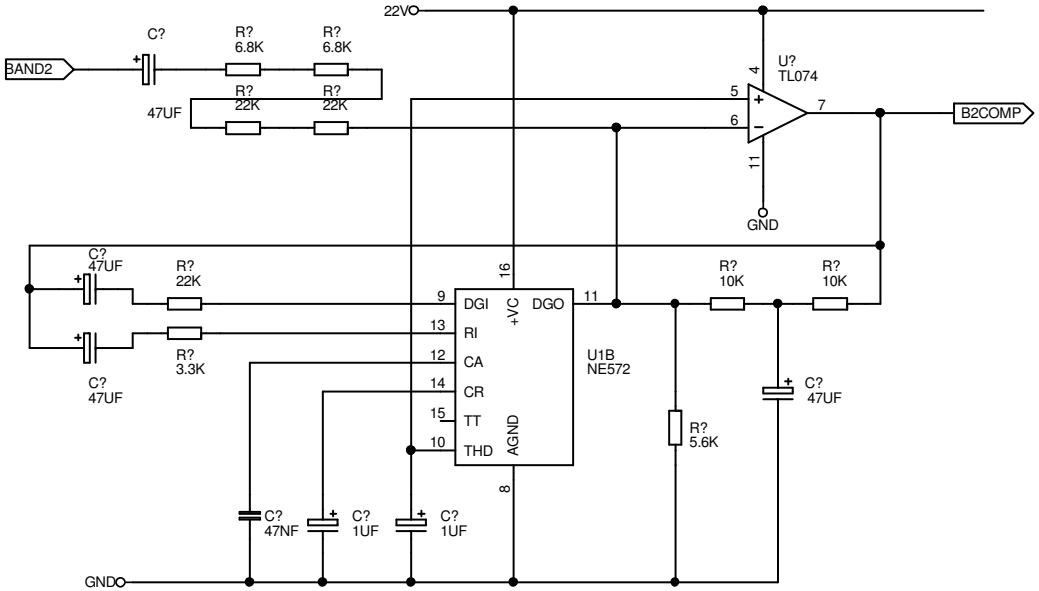


| | | |
|---|---|---|
| DESIGNMOD01 | NAME: RADIO GLEN MODULATOR | |
| FILE: MOD01-04.SCH | TITLE: BAND 1 AND 2 COMPRESSION | |
| CREATED: 08/12/97 | MOD: 22/01/2004 | |
| SHEET: 4 OF 6 | REV: 1.0 | SIZE: A3 |

ICARUS 07748 766447