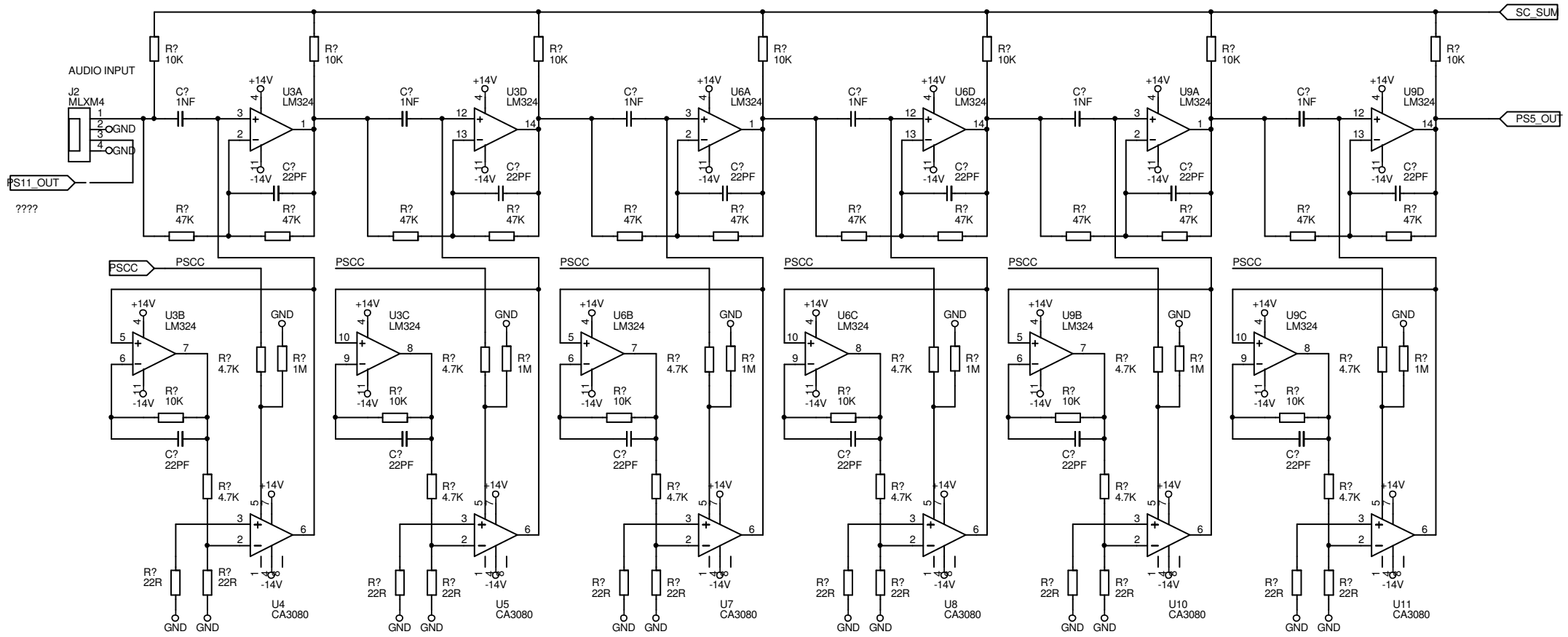

DESIGNHAM06	NAME: VOLTAGE CONTROLLED VIBRATO	
FILE: HAM06-02.SCH	TITLE: PHASE SHIFTERS 0 TO 5	
CREATED: 01/12/2000	MOD:	
SHEET: 2 OF 3	REV: 1.0	SIZE: A3

ICARUS 07748 766447