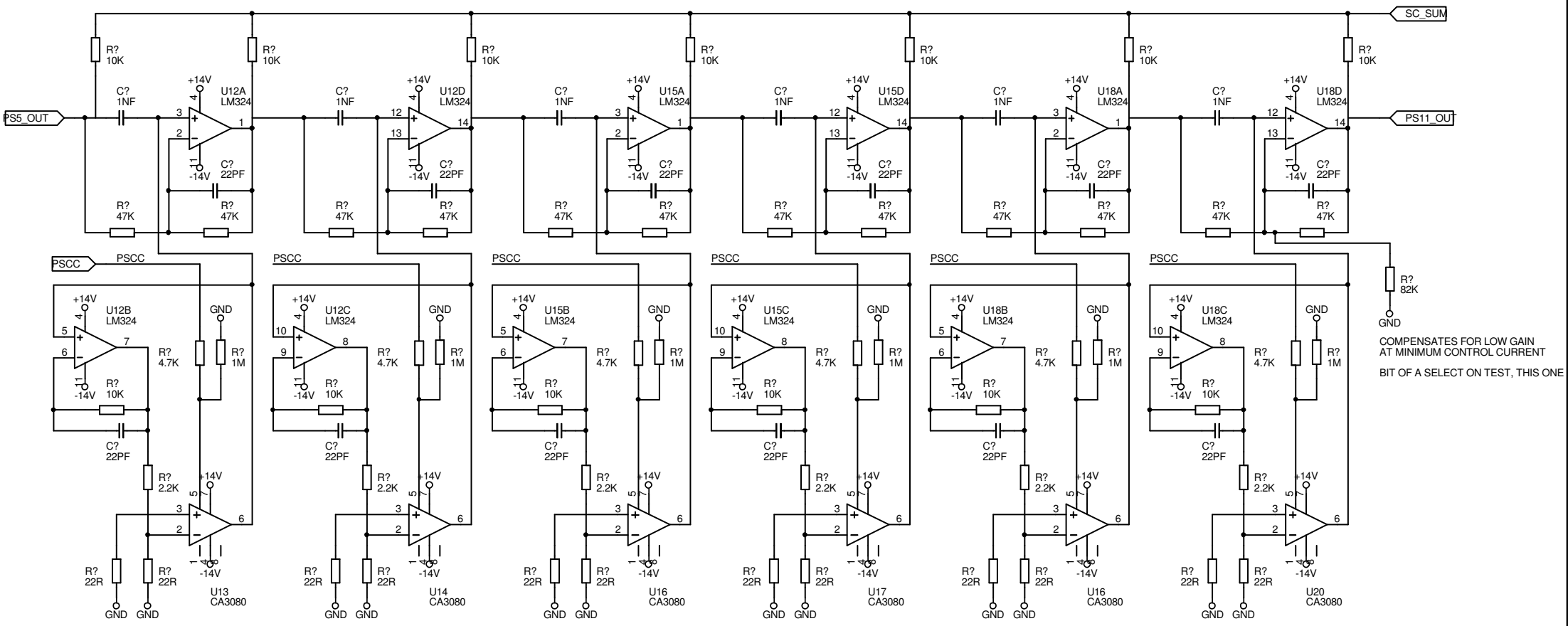

DESIGNHAM06	NAME: VOLTAGE CONTROLLED VIBRATO	
FILE: HAM06-03.SCH	TITLE: PHASE SHIFTERS 6 TO 11	
CREATED: 01/12/2000	MOD:	
SHEET: 3 OF 3	REV: 1.0	SIZE: A3

ICARUS 07748 766447