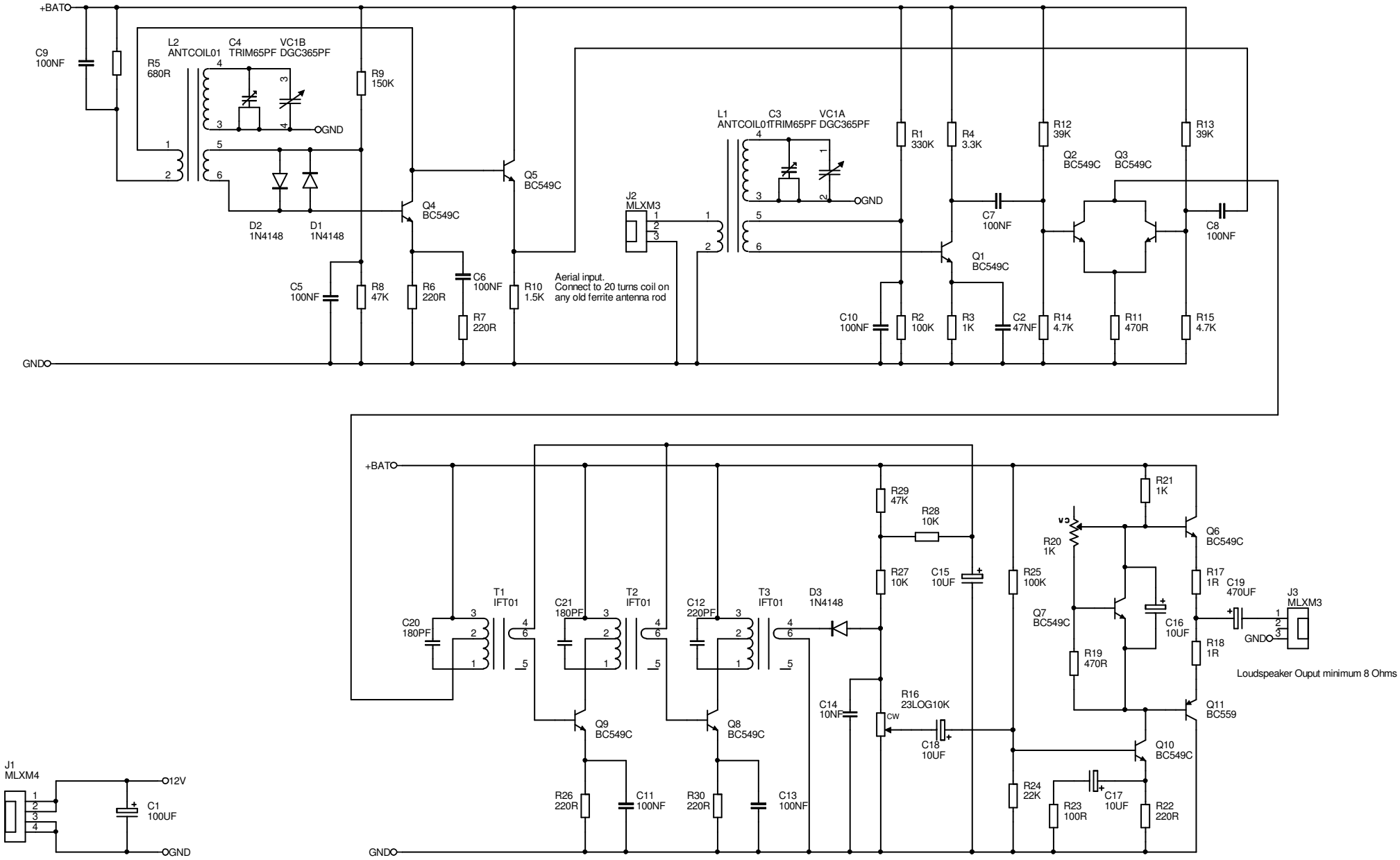

DESIGNMWR01	NAME: MW RADIO	
FILE: MWR01-01.SCH	TITLE: Everything	
CREATED: 06/03/98	MOD: 22/01/2004	
SHEET: 1 OF 1	REV: 1.0	SIZE: A3

ICARUS 07748 766447