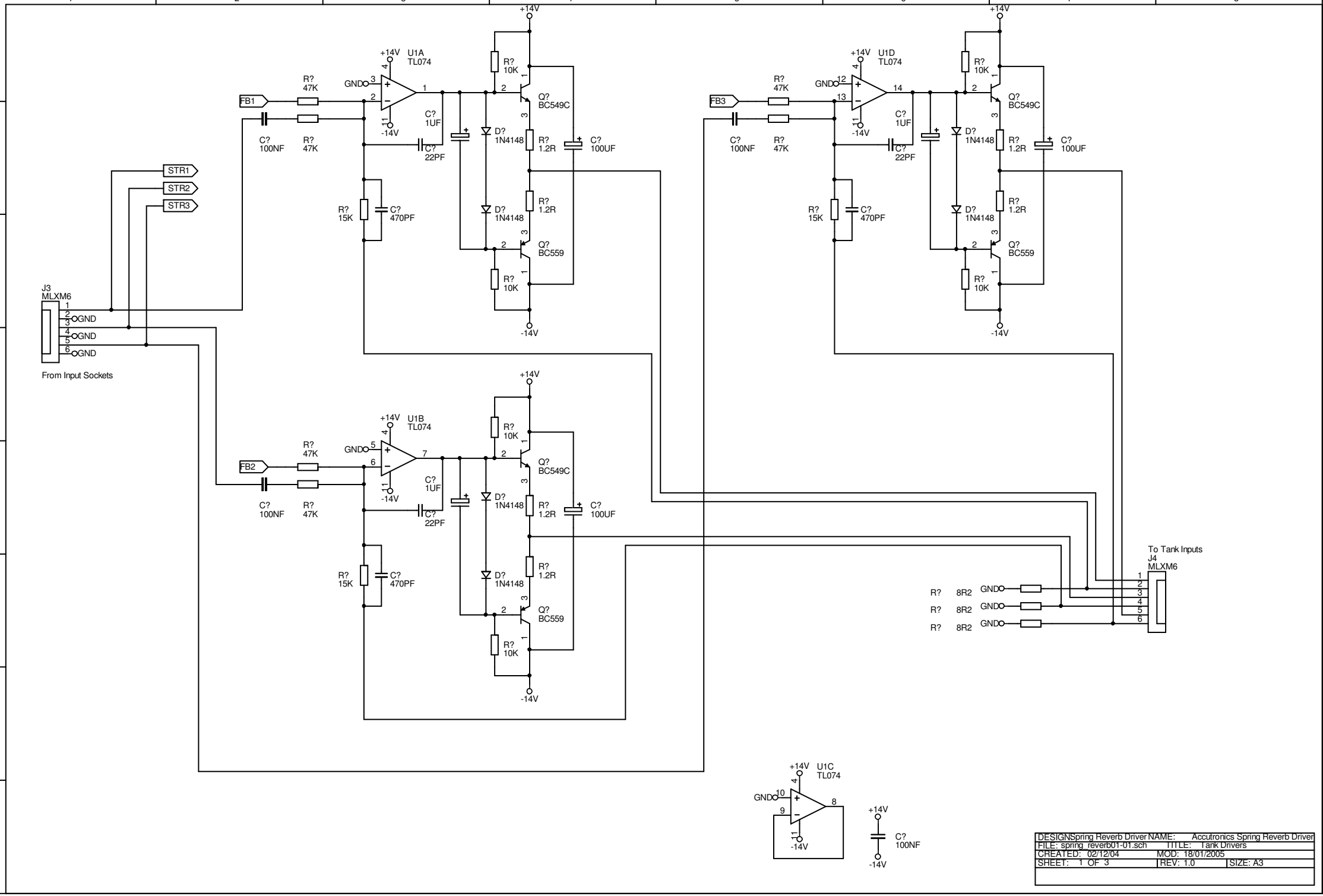
U1A
TL074
U1B
TL074
U1C
TL074
U1D
TL074
+14V
-14V
GND
FB1
FB2
FB3
STR1
STR2
STR3
R? 47K
C? 100NF
C? 1UF
C? 22PF
R? 15K
C? 470PF
R? 10K
R? 1.2R
D? 1N4148
Q? BC549C
Q? BC559
C? 100UF
J3
MLXM6
From Input Sockets
J4
MLXM6
To Tank Inputs
R? 8R2
C? 100NF
DESIGNSpring Reverb Driver NAME: Accutronics Spring Reverb Driver
FILE: spring_reverb01-01.sch TITLE: Tank Drivers
CREATED: 02/12/04 MOD: 18/01/2005
SHEET: 1 OF 3 REV: 1.0 SIZE: A3