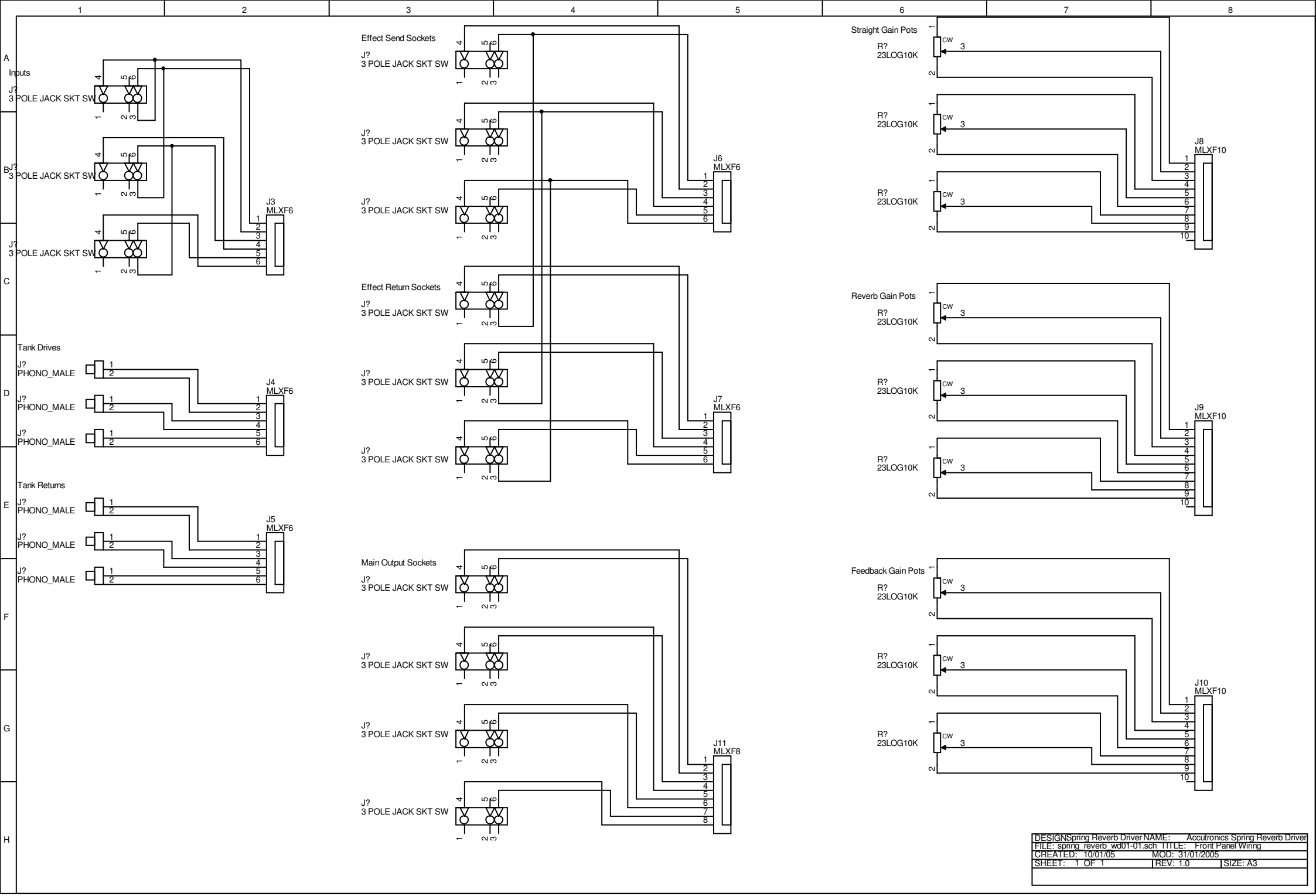

DESIGNSpring Reverb Driver	NAME: Accutronics Spring Reverb Driver	
FILE: spring_reverb_wd01-01.sch	TITLE: Front Panel Wiring	
CREATED: 10/01/05	MOD: 31/01/2005	
SHEET: 1 OF 1	REV: 1.0	SIZE: A3