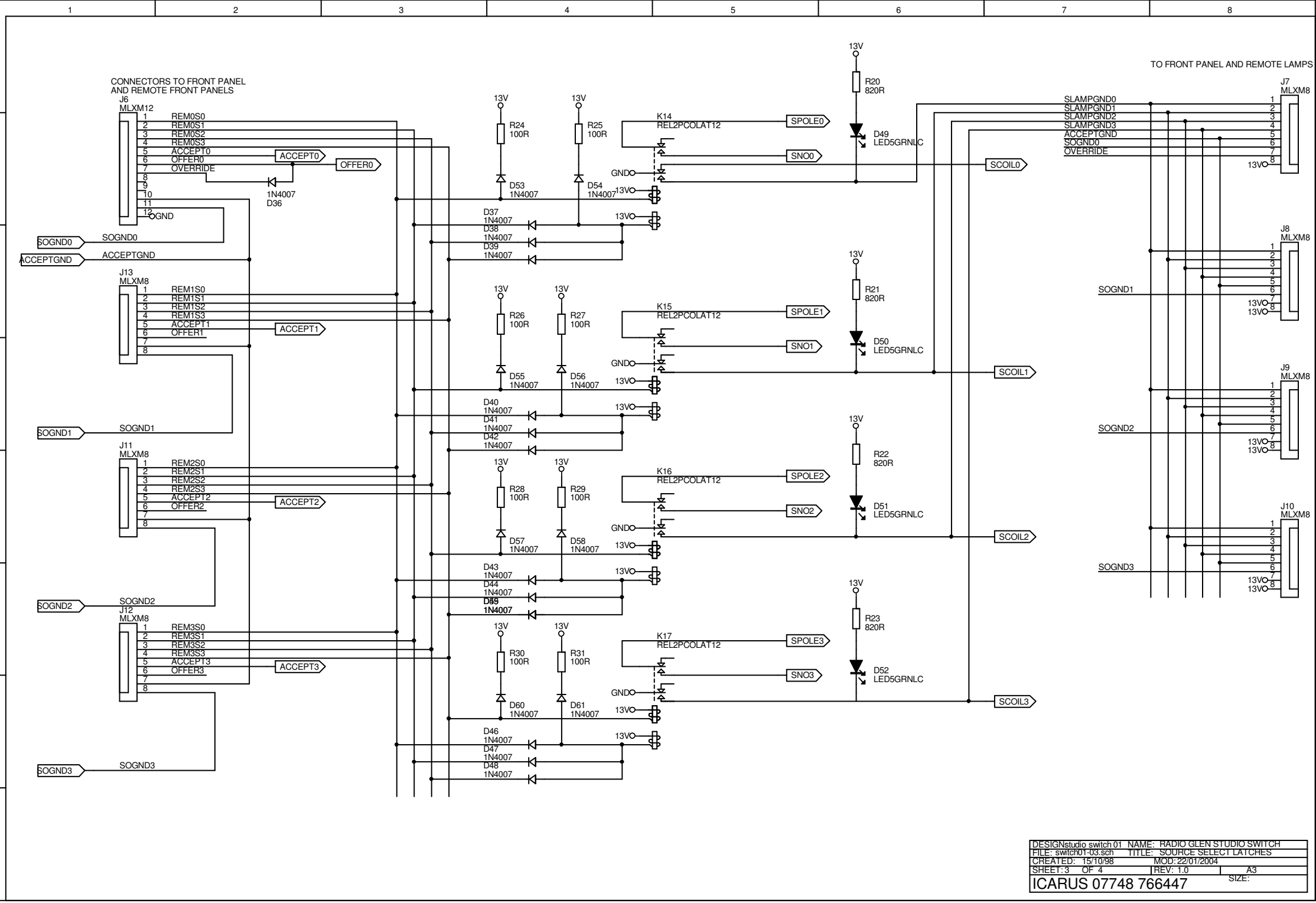

DESIGNstudio switch 01	NAME: RADIO GLEN STUDIO SWITCH		
FILE: switch01-03.sch	TITLE: SOURCE SELECT LATCHES		
CREATED: 15/10/98	MOD: 22/01/2004		
SHEET: 3 OF 4	REV: 1.0	SIZE:	A3
ICARUS 07748 766447			