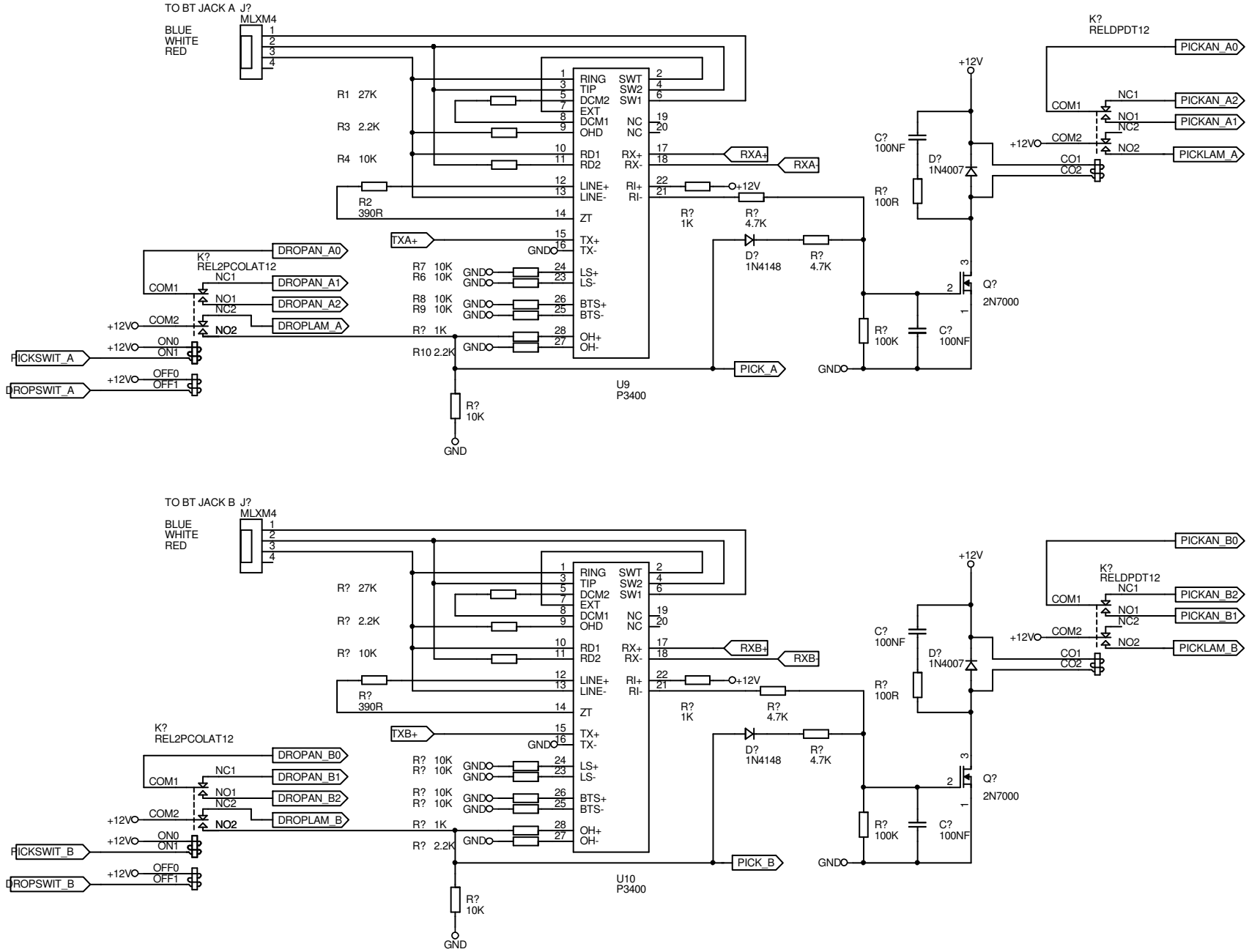

DESIGN: TBU01	NAME: RADIO GLEN TBU	
FILE: TBU01-02.SCH	TITLE: LINE INTERFACE MODULES	
CREATED: 19/05/2000	MOD: 28/01/102	
SHEET: 2 OF 4	REV: 1.0	SIZE: A3

ICARUS 07748 766447