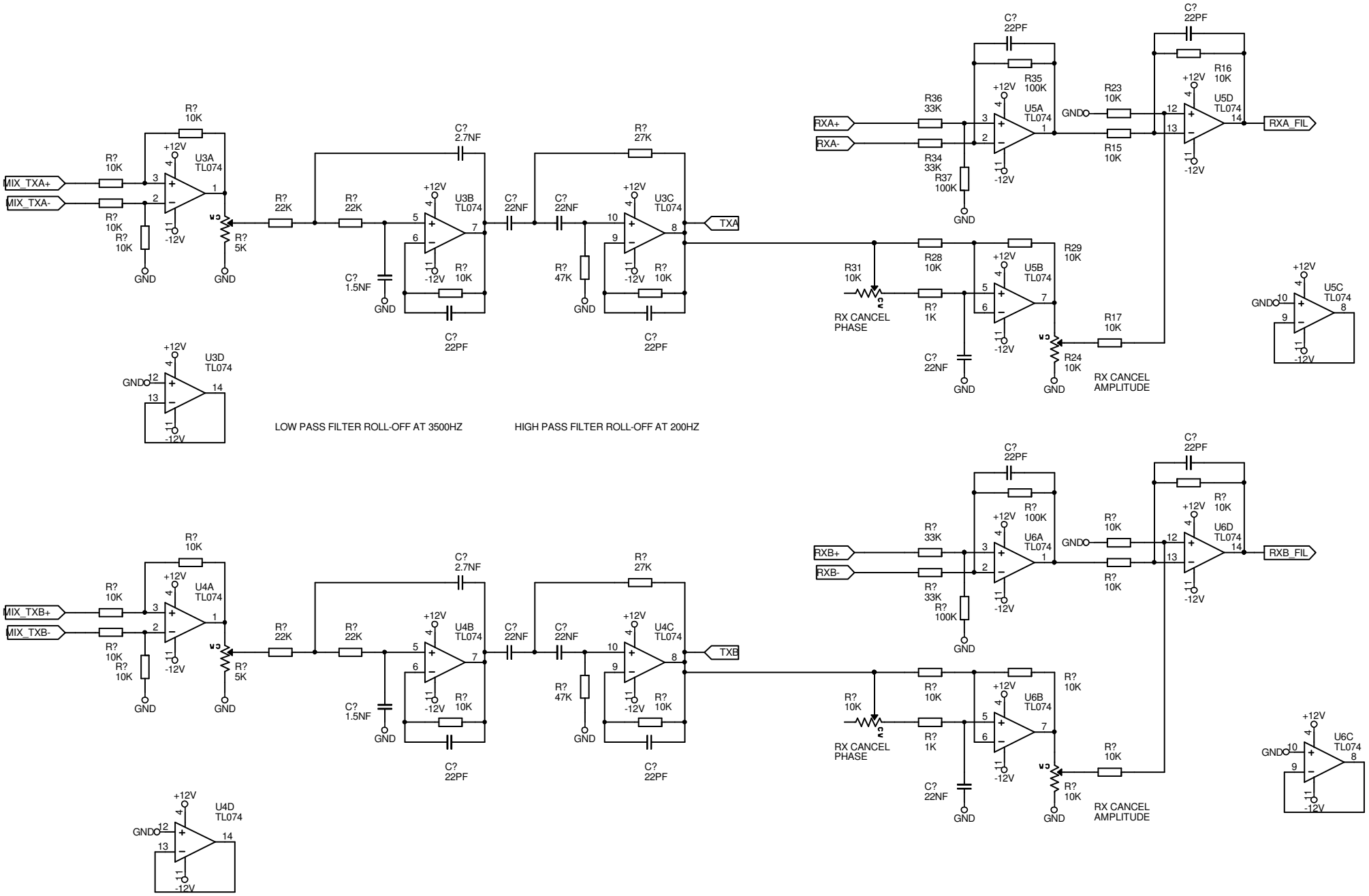

DESIGN: TBU01	NAME: RADIO GLEN TBU	
FILE: TBU01-03.SCH	TITLE: TX-RX HYBRID CANCELLATION	
CREATED: 11/05/2000	MOD: 22/01/2004	
SHEET: 3 OF 4	REV: 1.0	SIZE: A3

ICARUS 07748 766447