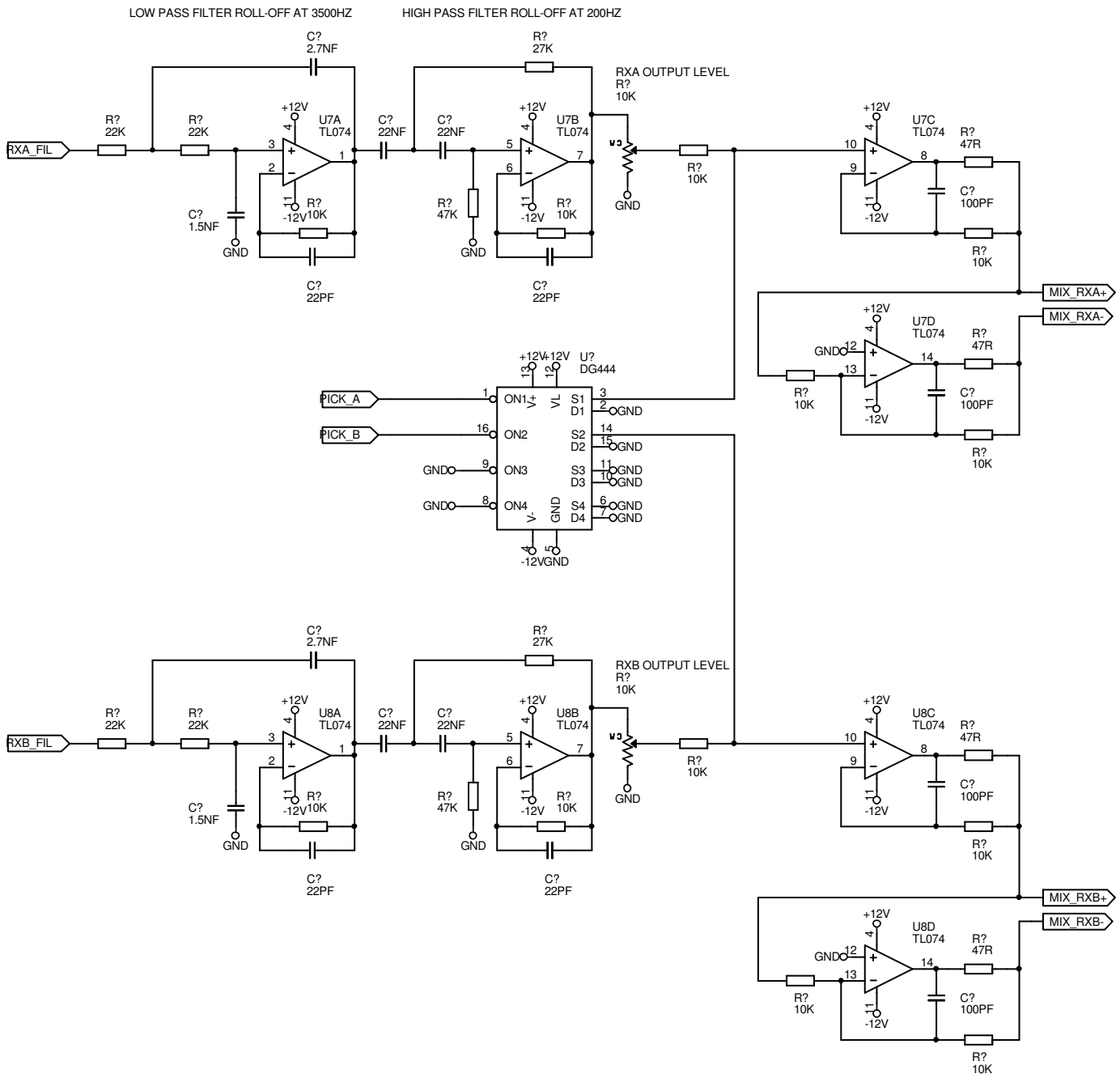

DESIGN: TBU01		NAME: RADIO GLEN TBU	
FILE: TBU01-04.SCH		TITLE: AUDIO I/O AND FILTERS	
CREATED: 11/05/2000		MOD: 22/01/2004	
SHEET: 4 OF 4		REV: 1.0	SIZE: A3

ICARUS 07748 766447